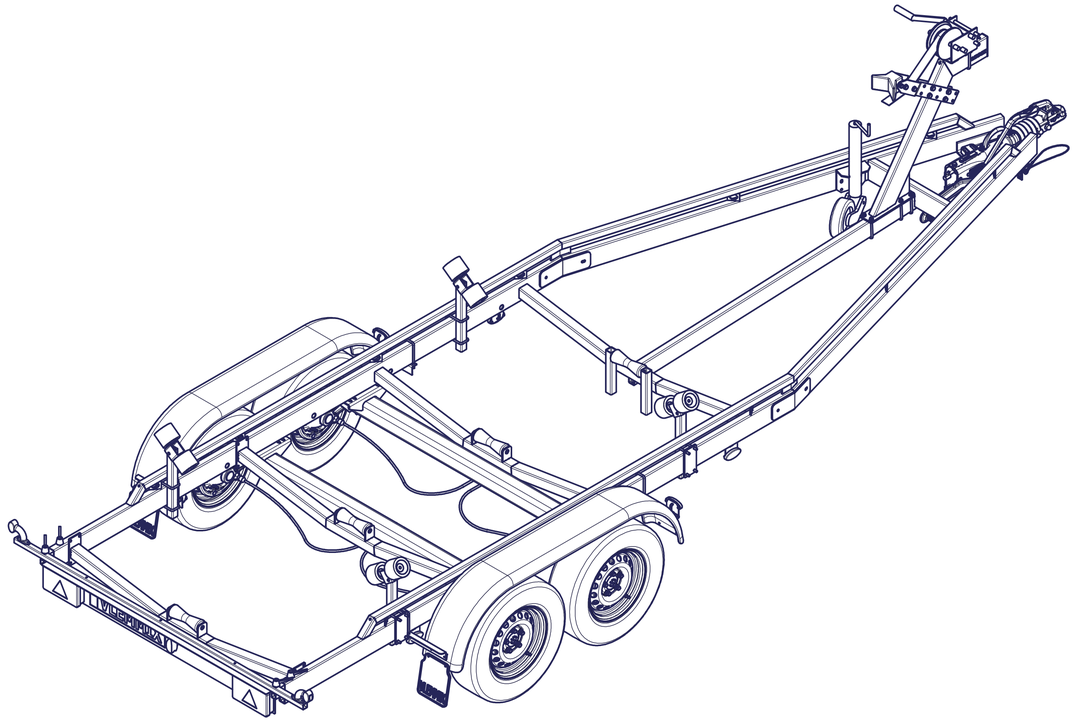

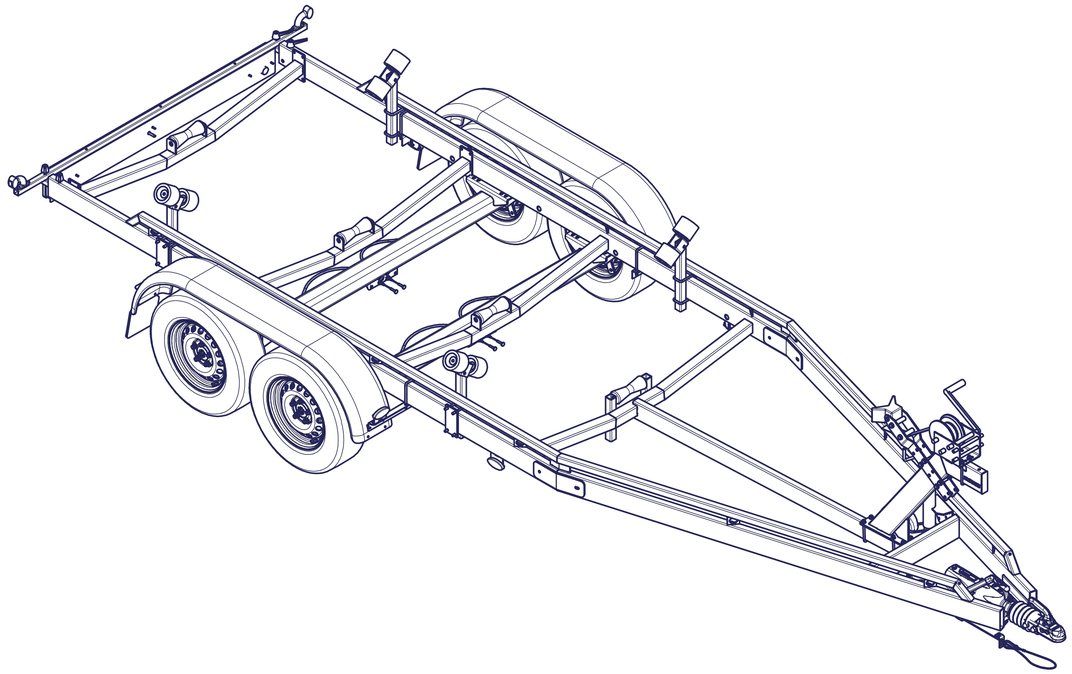

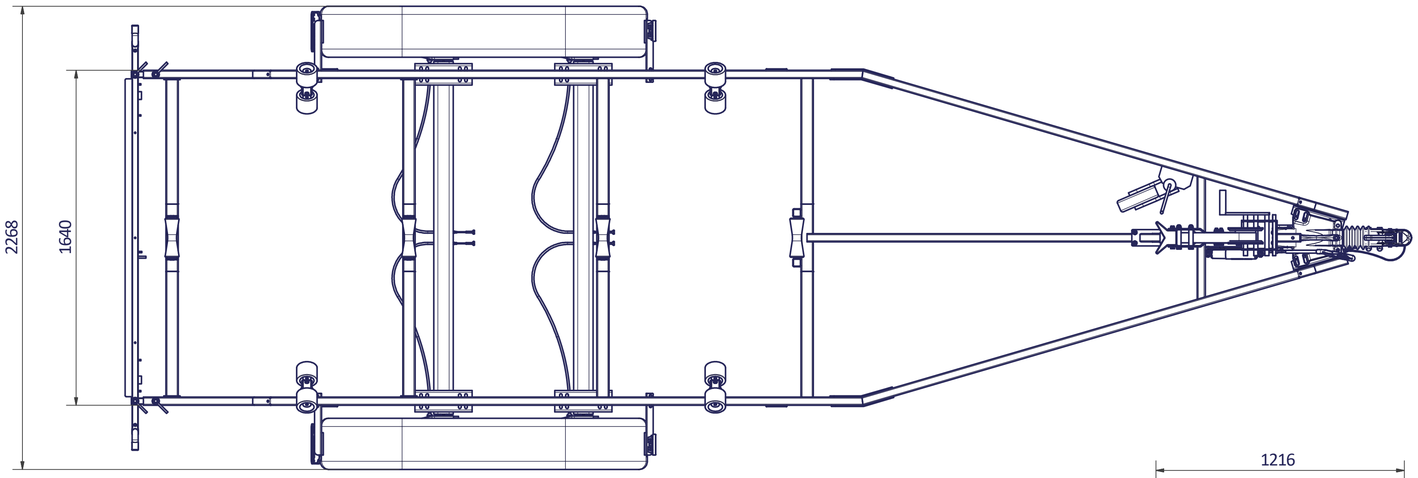

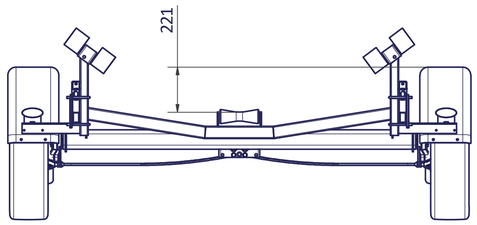

S-S

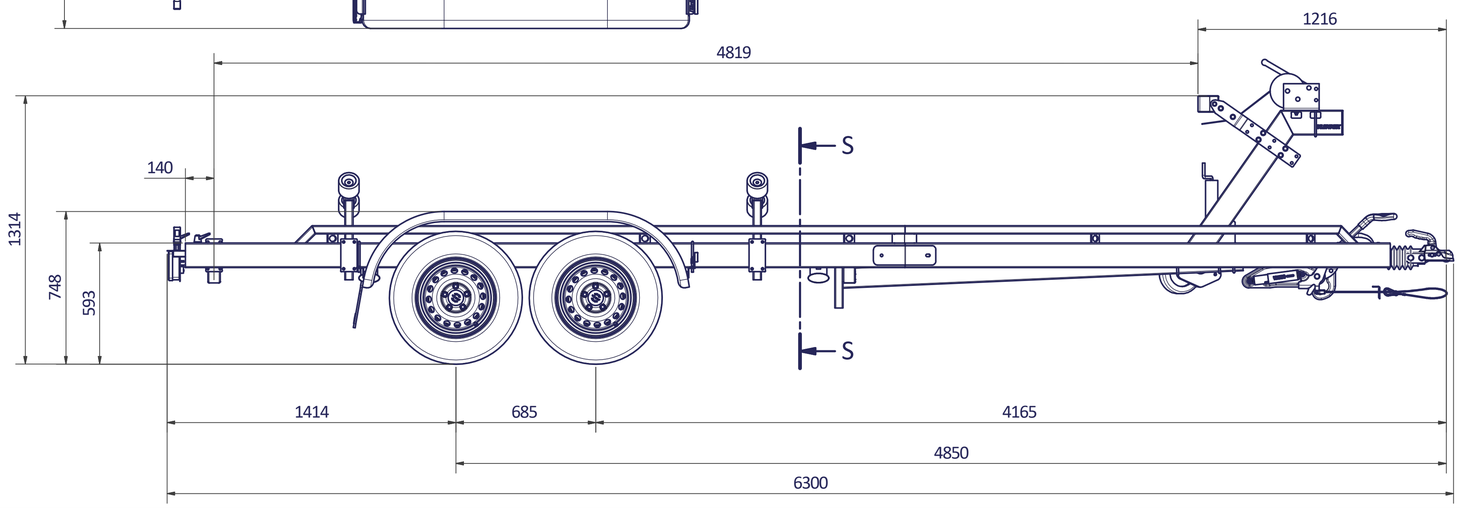

BOOTTRAILER 630

2x AS 1350 kg

Surface treatment: ZINK PLATED			
QTY:	© VLEMMIX AANHANGWAGENS This drawing and its contents may not be made accessible and/or duplicated for others without permission. All rights reserved.		
TOLERANCE: ISO 2768-MK	UNIT: mm	DRAWN BY: J.H. / DATE: 22-9-2021	VLEMMIX aanhangwagens
	PROJECT/DRAWING NO.: BT6.3-021-00		
SCALE: 1 : 15	DESCRIPTION: BOOTTRAILER 6.3 M	SHEET: 1 / SHEETS: 2	

A1